# Internet Protocol (IP)

**Dr. Arshad Ali**
**Associate Professor**
**NUCES, Lahore**

# Network Layer

Network layer is concerned with getting packets from the source **all the way** to the destination (**end-end to transmission)**

- May require many hops at intermediate routers (**multiple hops**),

- Its primary function is **routing**

- Network layer should provide either connection oriented or connectionless service

# Network Layer Protocol
# Internet Protocol (IP)

# IP ADDRESSES

*An IP address uniquely and universally defines the connection of a device (a computer or a router) to the Internet*

**Types of IP addresses in active use**

- IP version 4 (IPv4)
- IP version 6 (IPv6)

# Types of IP ADDRESSES

**IP version 4 (IPv4)**

- Initially deployed on Jan 1, 1983
- Still most commonly used version
- A 32 bit address in length
- Expressed as four 8 bit Octets separated by **a period symbol** (Dotted decimal notation)
  - 192.2.3.50
- Its **address space** is **$2^{32}$ or 4,294,967,296**

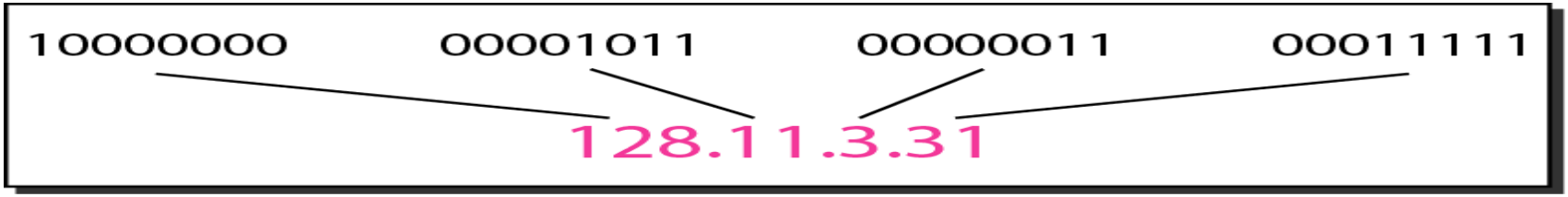

# Types of IP ADDRESSES

**IP version 6 (IPv6)**

- Its deployment started in 1999
- 128 bit numbers
- conventionally expressed using hexadecimal strings
- *2001:0db8:582:ae33::29*
- *Apparently Address space is* $\mathbf{2^{128}}$

# IPv4 Addresses (classful)

# IPv4 classes in binary and dotted-decimal notation

The address space is divided into five classes:
A, B, C, D, and E

| | First byte | Second byte | Third byte | Fourth byte |
|---|---|---|---|---|
| Class A | 0 | | | |
| Class B | 10 | | | |
| Class C | 110 | | | |
| Class D | 1110 | | | |
| Class E | 1111 | | | |

a. Binary notation

| | First byte | Second byte | Third byte | Fourth byte |
|---|---|---|---|---|
| Class A | 0–127 | | | |
| Class B | 128–191 | | | |
| Class C | 192–223 | | | |
| Class D | 224–239 | | | |
| Class E | 240–255 | | | |

b. Dotted-decimal notation

# Finding the Class

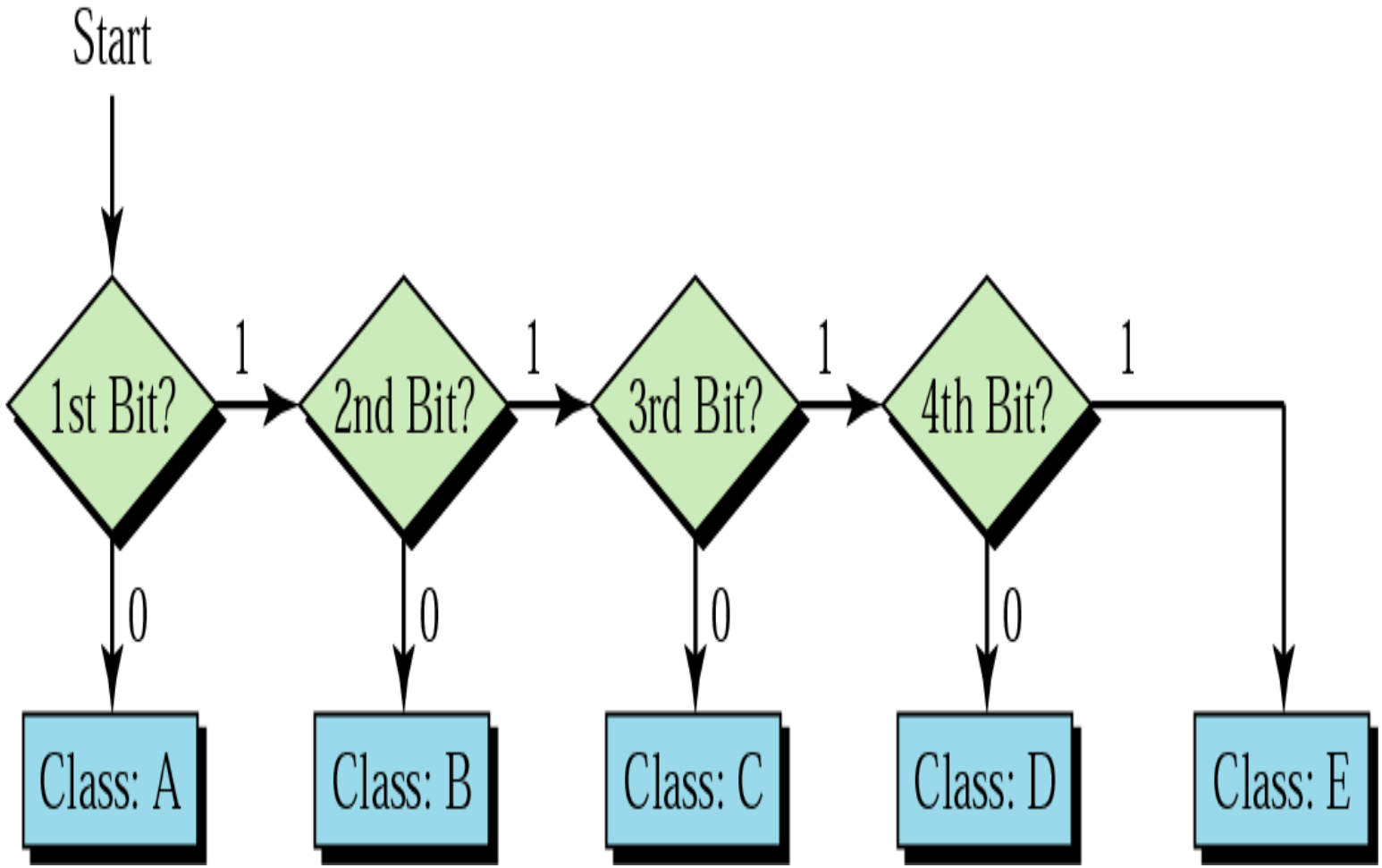

# IPv4 ADDRESSES

**IP address** is divided into two parts

- **Prefix** defines the network (Network ID or **Net ID):**
  - like street address

- **Suffix (Host ID)** defines the node (connection of a device to the network):
  - Like house or building number

- A **host** is a device that has a network interface card (NIC) connected to a network

# IPv4 ADDRESSES

- If a device has **two** network interfaces, it should be considered **two separate hosts**
- Each host that is attached to a TCP/IP network must have a **unique IP address**

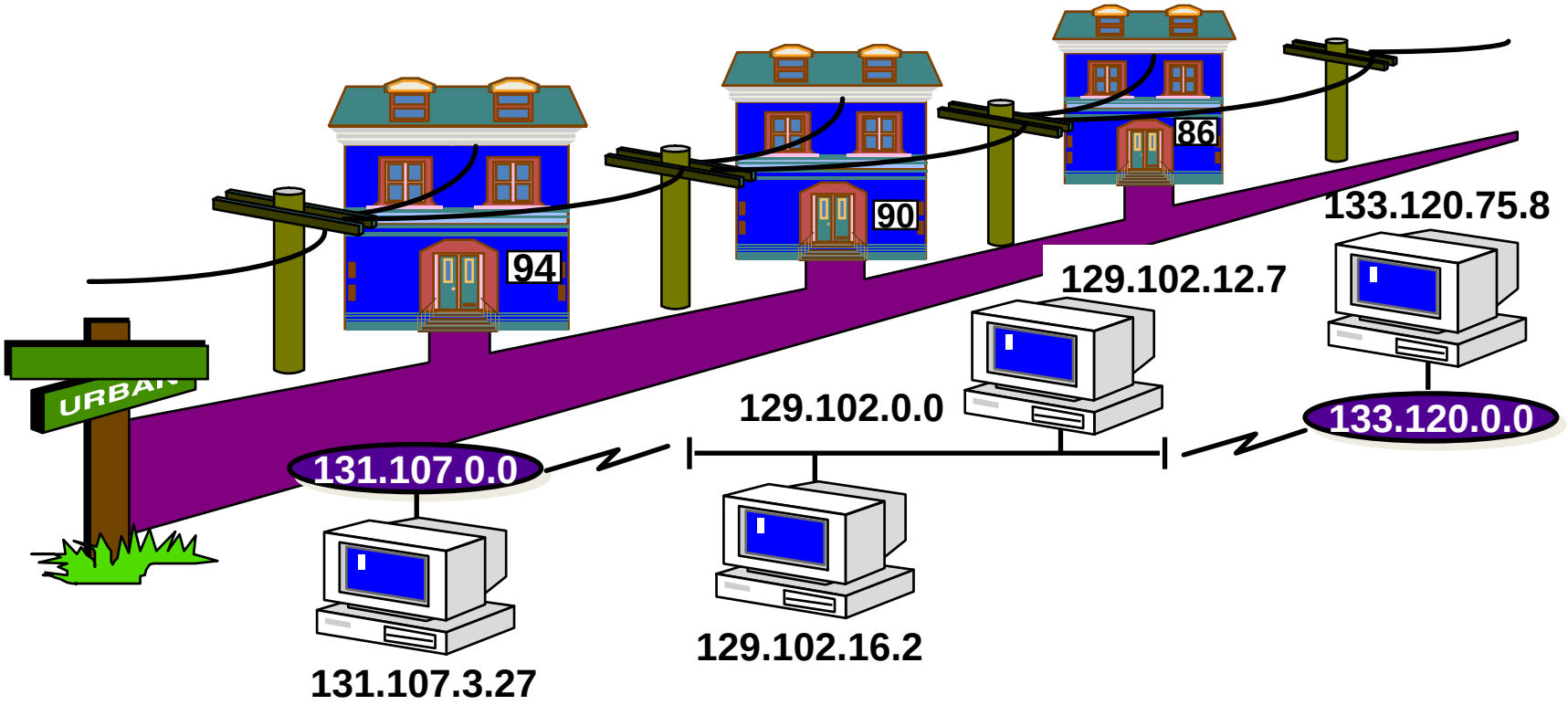

# Netid and Hostid

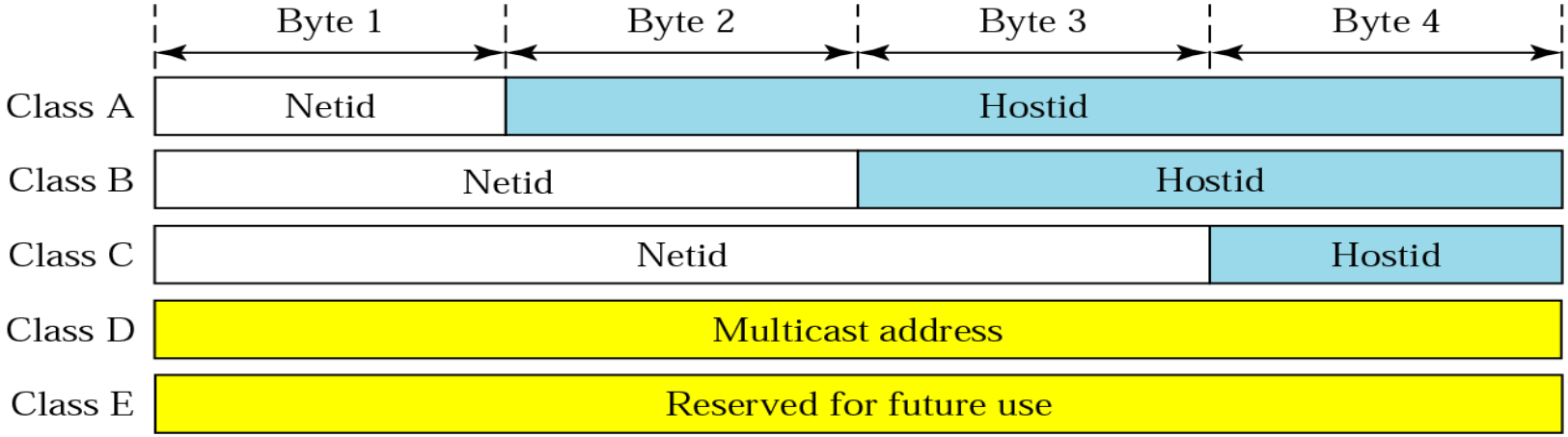


- **Hostid: cannot be all 0s**
  - If host portion is all 0s, represents a **network** address.
- **Hostid: cannot be all 1s**
  - If host portion is all 1s, represents **broadcast** address.

# Number of blocks and block size in classful IPv4 addressing

| Class | Number of Blocks | Block Size | Application |
|---|---|---|---|
| A | 128 | 16,777,216 | Unicast |
| B | 16,384 | 65,536 | Unicast |
| C | 2,097,152 | 256 | Unicast |
| D | 1 | 268,435,456 | Multicast |
| E | 1 | 268,435,456 | Reserved |

# Class A Address

- First bit: always 0. Remaining bits can be either 0s or 1s.
- Range of first octet is 00000000 to 01111111
  - Network addresses cannot be all 0s (**0.0.0.0** through **0.255.255.255**): nodes attempting to use them will be unable to communicate properly on the Internet
  - 127 is reserved for **loopback testing**
- **126 valid Class A network IDs**: 1.x.y.z to 126.x.y.z

# Class A Address

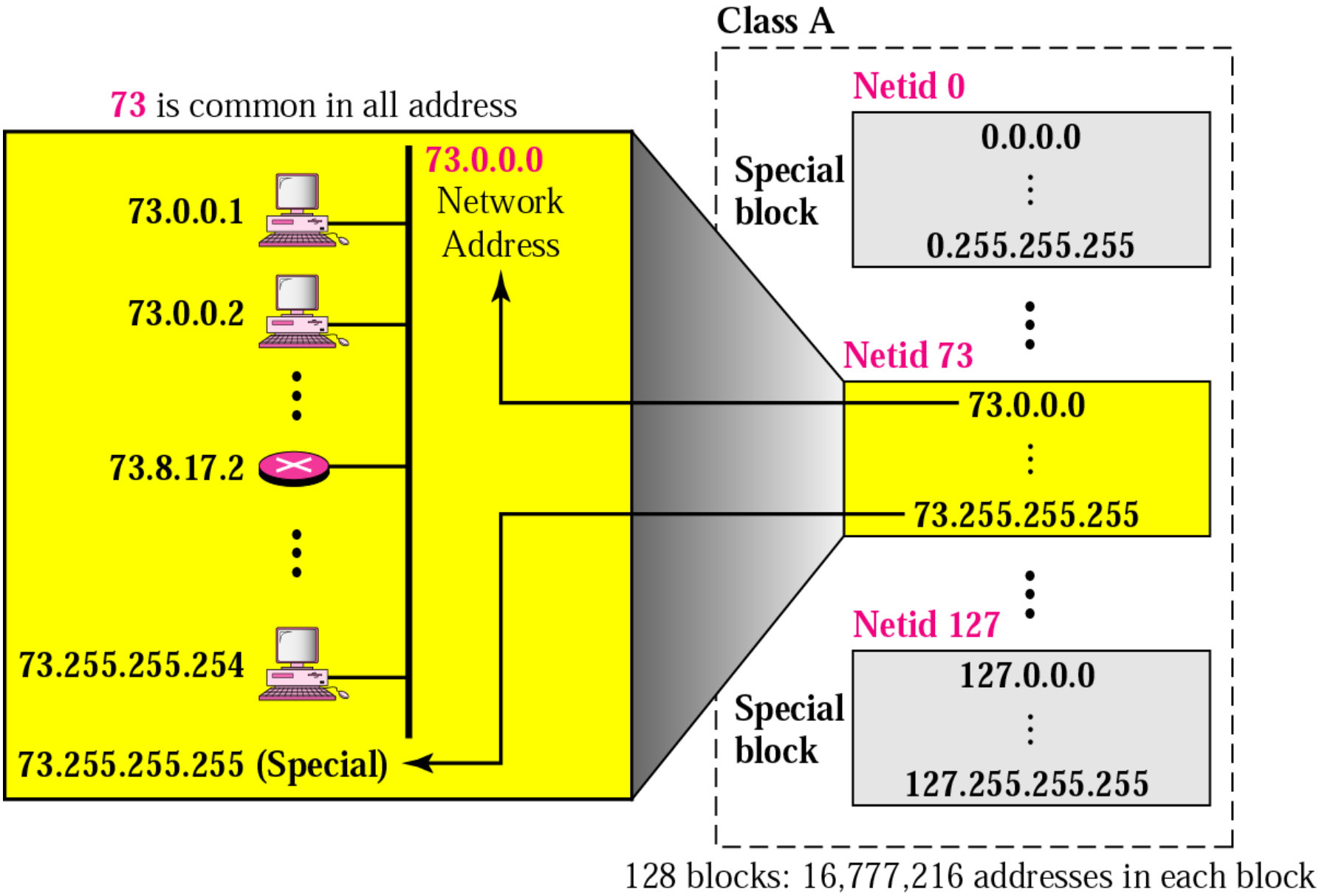

# Blocks in class B

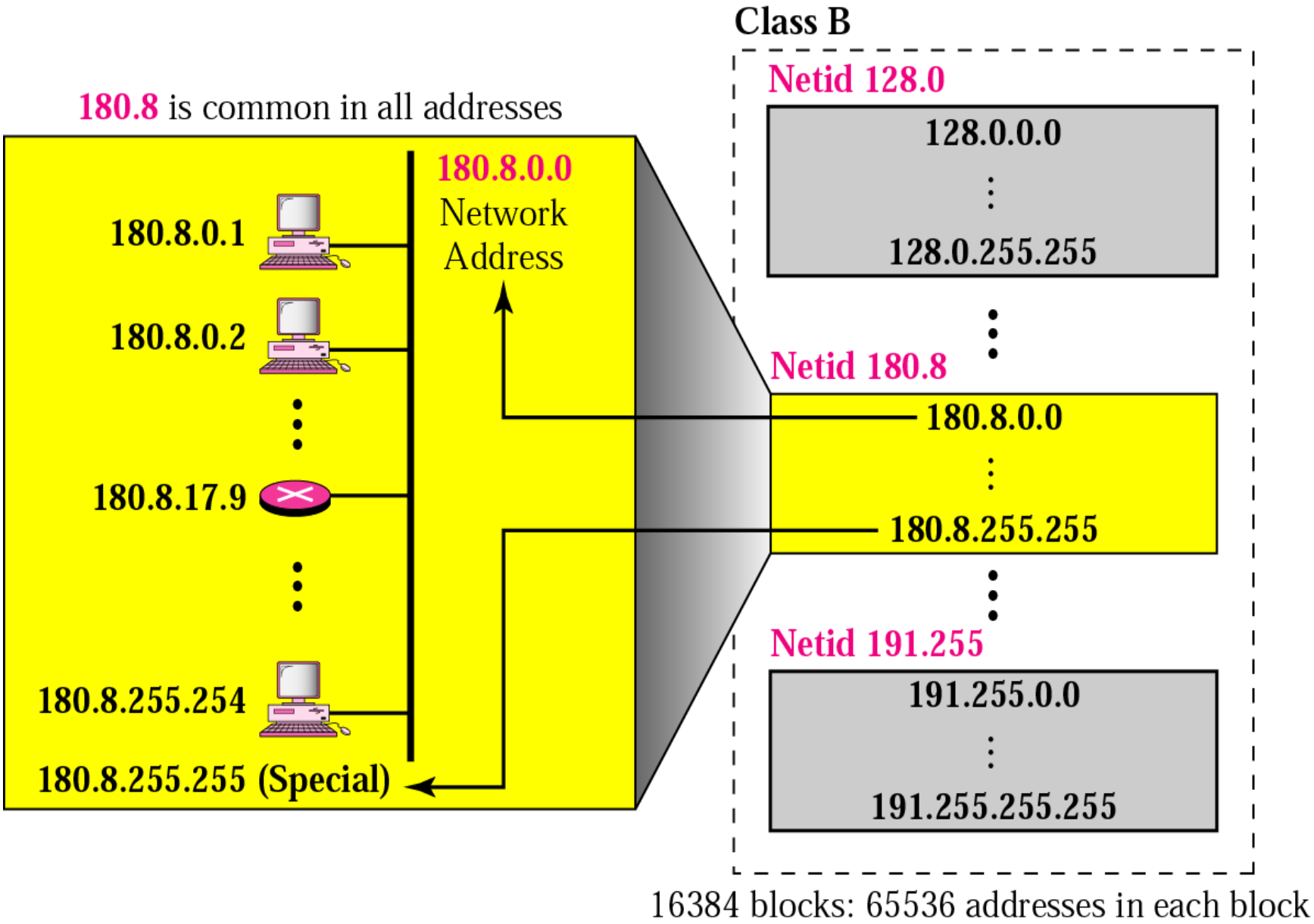

# Blocks in Class C

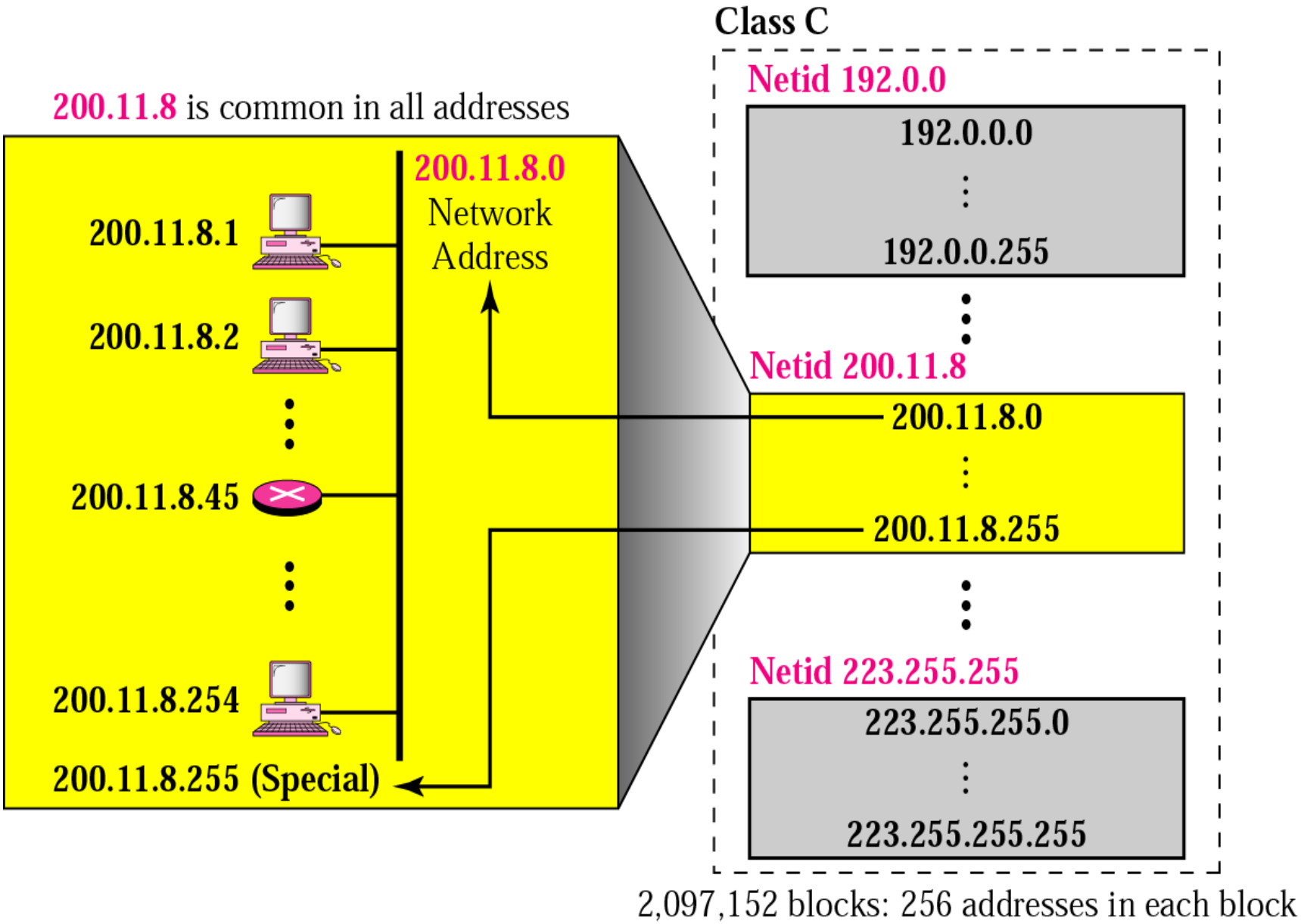

- **Class D addresses** (from 224.x.y.z to 239.x.y.z) are used for multicasting
  - method of sending a single packet to multiple hosts

- **Class E addresses** (from 240.x.y.z to 255.x.y.z)
  - experimental address range
  - Not used in actual networks

# Network Address

The **first address** is called the **network address**

- different from a **netid** and
- contains **both netid and hostid**
  - with **0s** for the **hostid**

➢It defines the **organization network** (to connect to the rest of world)

➢The **organization network** is **connected** to the **Internet** via a **router**.

➢The router has **two addresses**.

➢One belongs to the **granted block**;

➢the other belongs to the network that is **at the other side of the router**.

# Network Address

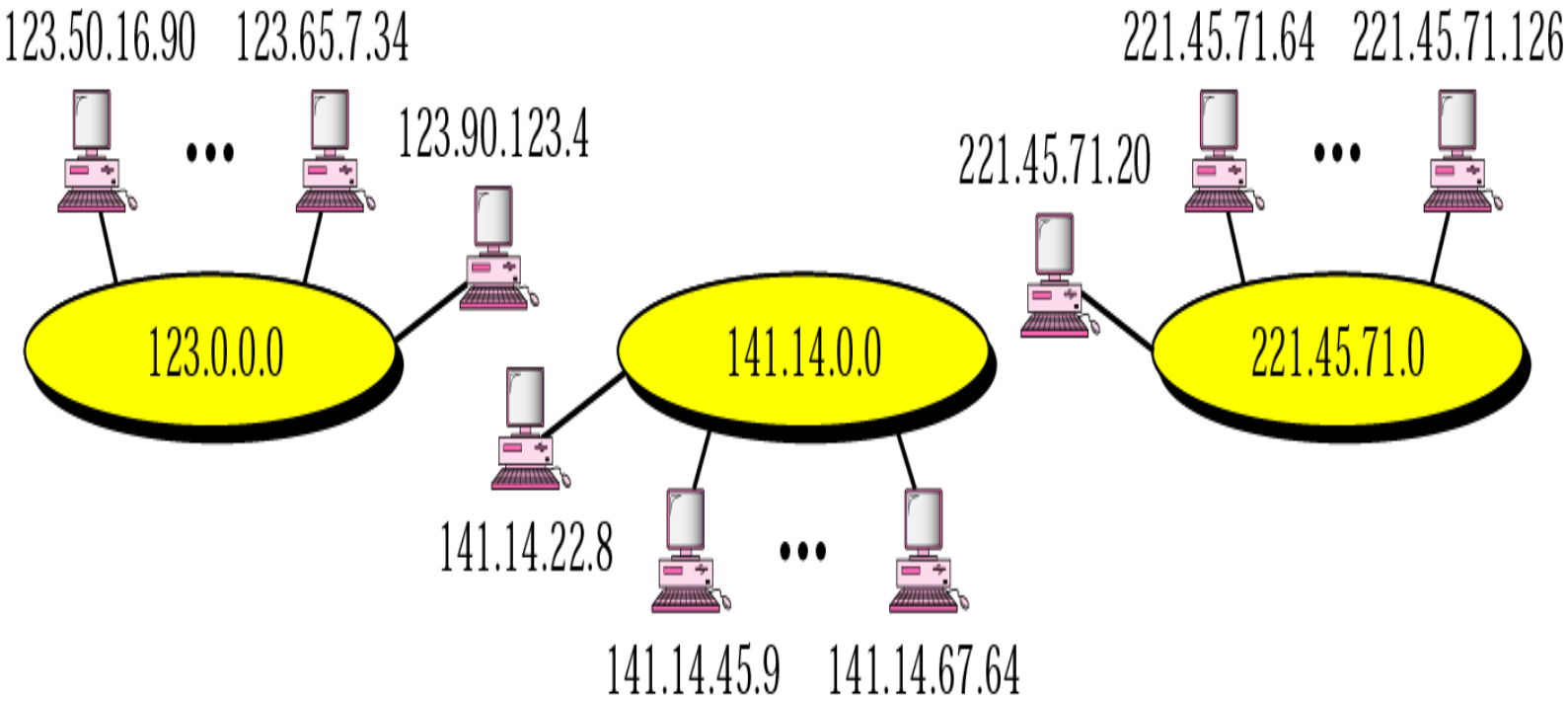


a. Class A b. Class B c. Class C

# Examples: Network Address

- **Question:** Given the address **23.56.7.91**, find the **network address**.
- **Answer:** Replacing the host-id bytes (56.7.91) with 0s.

So, the network address is **23.0.0.0**.

- **Question:** Given the address **132.6.17.85**, find the **network address**
- **Answer:** We can find the network address by replacing the hostid bytes (17.85) with 0s.

Thus, the network address is **132.6.0.0.**

# Address Class Summary

| | Number of Networks | Number of Hosts per Network | Range of Network IDs (First Octet) |
|---|---|---|---|
| Class A | 126 | 16,777,214 | 1 – 126 |
| Class B | 16,384 | 65,534 | 128 – 191 |
| Class C | 2,097,152 | 254 | 192 – 223 |

# Assigning Host IDs

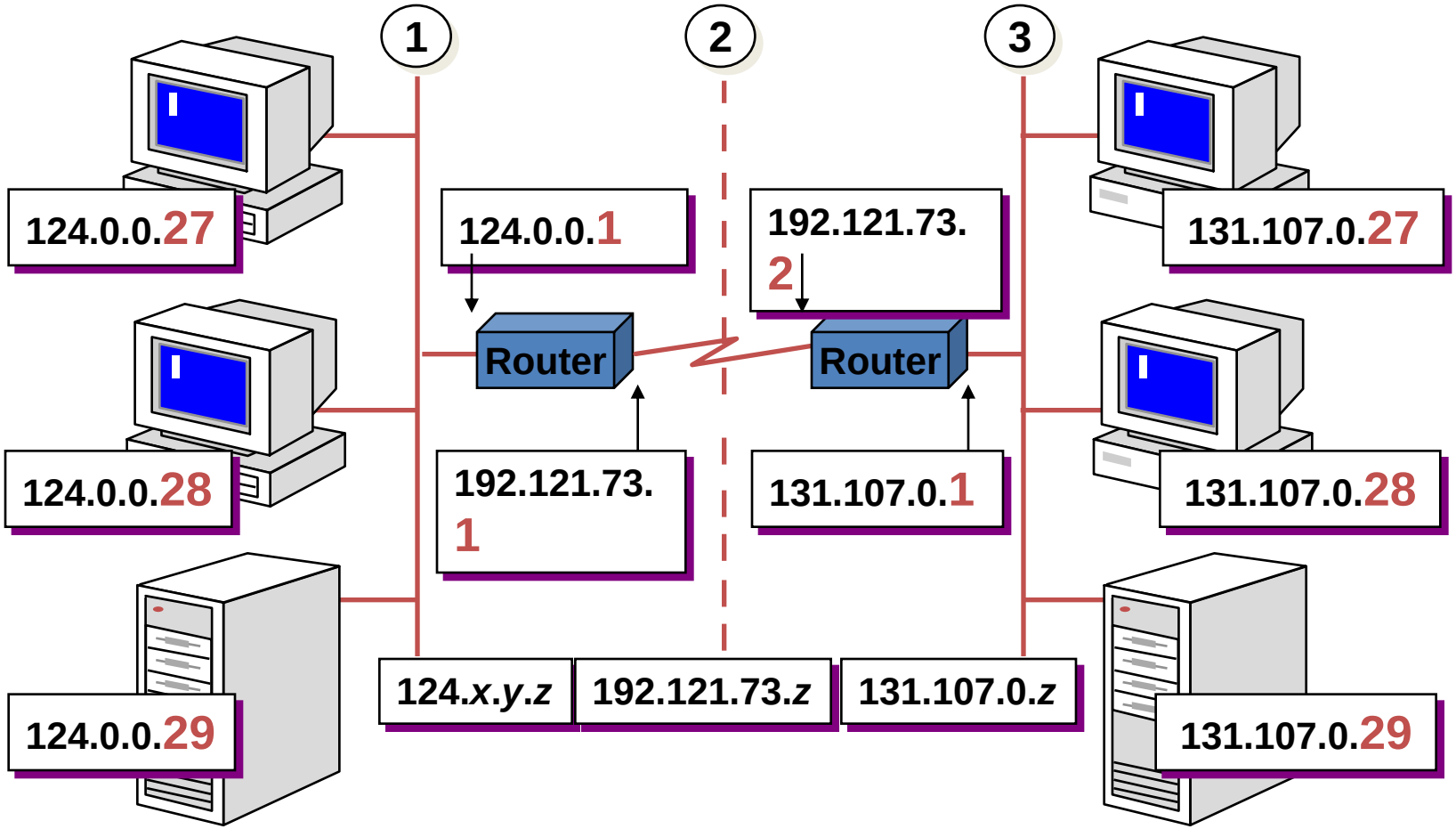

# Remember the following

**Network address:** If all the bits in the host part are "0", that represents the network id

**First usable IPv4 address:** If all the bits in the host part are "0" except the last bit

**Last usable IPv4 address :** If all the bits in the host part are "1" except the last bit

**Broadcast address:** If all the bits in the host part are "1"

# Reserved, Private addresses

**Private address block:**
**Class A:** 10.0.0.0 to 10.255.255.255 [16777216] (Private use networks)
**Class B:** 172.16.0.0 to 172.31.255.255 [1048576]
**Class C:** 192.168.0.0 to 192.168.255.255 [65536]

**Reserved:**
**Class A:** 0.0.0.0 to 0.255.255.255 & 127.0.0.0 to 127.255.255.255 (LB)
Administered by RIRs: Examples
128.0.0.0 to 128.0.255.255 & 191.255.0.0 to 191.255.255.255
192.0.0.0 to 192.0.0.255 ---------196.-.-.-, 198.-.-.-

# What is Subnet Mask?

**IPv4 address** has two components, the network part and the host part.

**The purpose of subnet mask** is to identify which part is the **network part** and which part is the **host part**.

**Subnet mask: A** 32 bit number where

- all the bits of the network part are shown as **1** and
- all the bits of the host part are represented as **0**.

**For example**, for a **Class C Network**, 192.168.10.0, the subnet mask is **255.255.255.0**

# Subnet and Sub-netting

- A logical, visible subdivision of an IP network is called **subnet** or **subnetwork:**
  - It is created by dividing the host identifier

- **Sub-netting** is the practice of dividing a network into two or more networks

- **Sub-netting** is done by taking the bits from host part and adding it to the network part

# Subnet and Sub-netting

**In sub-netting,** a class A or class B or class C block is divided into several subnets

- each subnet with larger prefix length than the original network).

➢**For example,** divide the **class A** into **four subnets**, (take two bits from host id part in order to obtain subnets).

  ➢then each subnet will have prefix length as 10

# Class C – 1 bit sub-netting

Consider class C network 192.168.10.0 (subnet mask is 255.255.255.0)

- If we include one bit from the host part to the network part, the subnet mask changes into 255.255.255.128 (for 1 bit sub-netting)
- The single bit can have two values in last octet, either 0 or 1
- 11000000.10101000.00001010.**0** | 0000000
  11111111.11111111.11111111.**1** | 0000000
- So the network 192.168.10.0 is divided into two networks with a single bit sub-netting,
- each network has 128 total addresses of which 126 are usable
- two are used in each subnet to represent the network address and broadcast address.

# Class C – 1 bit sub-netting

| SN No. | Description | Binaries | Decimal |
|---|---|---|---|
| 1 | Network Address | 11000000.10101000.00001010.**0**0000000 | 192.168.10.0 |
| | First usable address | 11000000.10101000.00001010.00000001 | 192.168.10.1 |
| | Last usable address | 11000000.10101000.00001010.01111110 | 192.168.10.126 |
| | Broadcast Address | 11000000.10101000.00001010.01111111 | 192.168.10.127 |
| 2 | Network Address | 11000000.10101000.00001010.**1**0000000 | 192.168.10.128 |
| | First usable address | 11000000.10101000.00001010.10000001 | 192.168.10.129 |
| | Last usable address | 11000000.10101000.00001010.11111110 | 192.168.10.254 |
| | Broadcast Address | 11000000.10101000.00001010.11111111 | 192.168.10.255 |

# Class C – 2 bit sub-netting

| SN No. | Description | Binaries | Decimal |
|---|---|---|---|
| 1 | NA | 11000000.10101000.00001010.**00**000000 | 192.168.10.0 |
| | 1st | 11000000.10101000.00001010.00000001 | 192.168.10.1 |
| | Last | 11000000.10101000.00001010.00111110 | 192.168.10.62 |
| | BA | 11000000.10101000.00001010.**00**111111 | 192.168.10.63 |
| 2 | NA | 11000000.10101000.00001010.**01**000000 | 192.168.10.64 |
| | 1st | 11000000.10101000.00001010.01000001 | 192.168.10.65 |
| | Last | 11000000.10101000.00001010.01111110 | 192.168.10.126 |
| | BA | 11000000.10101000.00001010.**01**111111 | 192.168.10.127 |
| 3 | NA | 11000000.10101000.00001010.**10**000000 | 192.168.10.128 |
| | 1st | 11000000.10101000.00001010.10000001 | 192.168.10.129 |
| | Last | 11000000.10101000.00001010.10111110 | 192.168.10.190 |
| | BA | 11000000.10101000.00001010.10111111 | 192.168.10.191 |
| 4 | NA | 11000000.10101000.00001010.**11**000000 | 192.168.10.192 |
| | 1st | 11000000.10101000.00001010.11000001 | 192.168.10.193 |
| | Last | 11000000.10101000.00001010.11111110 | 192.168.10.254 |
| | BA | 11000000.10101000.00001010.11111111 | 192.168.10.255 |

# Class C – 3 bit sub-netting

| SN No. | Description | Binaries | Decimal |
|---|---|---|---|
| 1 | NA | 11000000.10101000.00001010.**000**00000 | 192.168.10.0 |
| | 1st | 11000000.10101000.00001010.00000001 | 192.168.10.1 |
| | Last | 11000000.10101000.00001010.00011110 | 192.168.10.30 |
| | BA | 11000000.10101000.00001010.**000**11111 | 192.168.10.31 |
| 2 | NA | 11000000.10101000.00001010.**001**00000 | 192.168.10.32 |
| | 1st | 11000000.10101000.00001010.00100001 | 192.168.10.33 |
| | Last | 11000000.10101000.00001010.00111110 | 192.168.10.62 |
| | BA | 11000000.10101000.00001010.**001**11111 | 192.168.10.63 |
| | | ……. | |
| 8 | NA | 11000000.10101000.00001010.**111**00000 | 192.168.10.224 |
| | 1st | 11000000.10101000.00001010.11100001 | 192.168.10.225 |
| | Last | 11000000.10101000.00001010.11111110 | 192.168.10.254 |
| | BA | 11000000.10101000.00001010.**111**11111 | 192.168.10.255 |

# Class B – 1 bit sub-netting

Consider class B network 172.16.0.0 (subnet mask is 255.255.0.0)

- If we include one bit from the host part to the network part, the **subnet mask** changes into 255.255.128.0 (with 1 bit sub-netting)
- The single bit can have two values in last octet, either 0 or 1
- 10101100.00010000.**0** | 0000000.00000000
  11111111.11111111.**1** | 0000000.00000000
- So the network 172.16.0.0 is divided into two networks with single bit sub-netting,
  - each network has 32768 total addresses of which 32766 are usable, two are used in each subnet to represent the network address and broadcast address.

# Class B – 1 bit sub-netting

| SN No. | Description | Binaries | Decimal |
|---|---|---|---|
| 1 | Network Address | 10101100.00010000.**0**0000000.00000000 | 172.16.0.0 |
| | First address | 10101100.00010000.00000000.00000001 | 172.16.0.1 |
| | Last address | 10101100.00010000.01111111.11111110 | 172.16.127.254 |
| | Broadcast Address | 10101100.00010000.**0**1111111.11111111 | 172.16.127.255 |
| 2 | Network Address | 10101100.00010000.**1**0000000.00000000 | 172.16.128.0 |
| | First address | 10101100.00010000.10000000.00000001 | 172.16.128.1 |
| | Last address | 10101100.00010000.11111111.11111110 | 172.16.255.254 |
| | Broadcast Address | 10101100.00010000.**1**1111111.11111111 | 172.16.255.255 |

# Class B – 2 bit sub-netting

| SN No. | Description | Binaries | Decimal |
|---|---|---|---|
| 1 | NA | 10101100.00010000.**00**000000.00000000 | 172.16.0.0 |
| | 1st | 10101100.00010000.**00**000000.00000001 | 172.16.0.1 |
| | Last | 10101100.00010000.**00**111111.11111110 | 172.16.63.254 |
| | BA | 10101100.00010000.**00**111111.11111111 | 172.16.63.255 |
| 2 | NA | 10101100.00010000.**01**000000.00000000 | 172.16.64.0 |
| | 1st | 10101100.00010000.**01**000000.00000001 | 172.16.64.1 |
| | Last | 10101100.00010000.**01**111111.11111110 | 172.16.127.254 |
| | BA | 10101100.00010000.**01**111111.11111111 | 172.16.127.255 |
| 3 | NA | 10101100.00010000.**10**000000.00000000 | 172.16.128.0 |
| | 1st | 10101100.00010000.**10**000000.00000001 | 172.16.128.1 |
| | Last | 10101100.00010000.**10**111111.11111110 | 172.16.191.254 |
| | BA | 10101100.00010000.**10**111111.11111111 | 172.16.191.255 |
| 4 | NA | 10101100.00010000.**11**000000.00000000 | 172.16.192.0 |
| | 1st | 10101100.00010000.**11**000000.00000001 | 172.16.192.1 |
| | Last | 10101100.00010000.**11**111111.11111110 | 172.16.192.254 |
| | BA | 10101100.00010000.**11**111111.11111111 | 172.16.192.255 |

# Example: Route 193.205.102.36

| 193 | | | | | | | | 205 | | | | | | | | 102 | | | | | | | | 36 | | | | | | | |
|---|---|---|---|---|---|---|---|---|---|---|---|---|---|---|---|---|---|---|---|---|---|---|---|---|---|---|---|---|---|---|---|
| 1 | 1 | 0 | 0 | 0 | 0 | 0 | 1 | 1 | 1 | 0 | 0 | 1 | 1 | 0 | 1 | 0 | 1 | 1 | 0 | 0 | 1 | 1 | 0 | 0 | 0 | 1 | 0 | 0 | 1 | 0 | 0 |

Class C address;
Outside private domain routed with mask 255.255.255.0

| network | | | | | | | | | | | | | | | | | | | | | | | | host | | | | | | | |
|---|---|---|---|---|---|---|---|---|---|---|---|---|---|---|---|---|---|---|---|---|---|---|---|---|---|---|---|---|---|---|---|
| 193 | | | | | | | | 205 | | | | | | | | 102 | | | | | | | | 36 | | | | | | | |
| 1 | 1 | 0 | 0 | 0 | 0 | 0 | 1 | 1 | 1 | 0 | 0 | 1 | 1 | 0 | 1 | 0 | 1 | 1 | 0 | 0 | 1 | 1 | 0 | 0 | 0 | 1 | 0 | 0 | 1 | 0 | 0 |

Inside private domain, administrator has set netmask 255.255.255.248

| 255 | | | | | | | | 255 | | | | | | | | 255 | | | | | | | | 248 | | | | | | | |
|---|---|---|---|---|---|---|---|---|---|---|---|---|---|---|---|---|---|---|---|---|---|---|---|---|---|---|---|---|---|---|---|
| 1 | 1 | 1 | 1 | 1 | 1 | 1 | 1 | 1 | 1 | 1 | 1 | 1 | 1 | 1 | 1 | 1 | 1 | 1 | 1 | 1 | 1 | 1 | 1 | 1 | 1 | 1 | 1 | 1 | 0 | 0 | 0 |

Hence, route to subnet address and then to host id, computed as:

| network | | | | | | | | | | | | | | | | | | | | | | | | subnet | | | | | host | | |
|---|---|---|---|---|---|---|---|---|---|---|---|---|---|---|---|---|---|---|---|---|---|---|---|---|---|---|---|---|---|---|---|
| 1 | 1 | 0 | 0 | 0 | 0 | 0 | 1 | 1 | 1 | 0 | 0 | 1 | 1 | 0 | 1 | 0 | 1 | 1 | 0 | 0 | 1 | 1 | 0 | 0 | 0 | 1 | 0 | 0 | 1 | 0 | 0 |
| 193.205.102.32 /29 | | | | | | | | | | | | | | | | | | | | | | | | | | | | | 4 | | |

# Classless Addressing

- **Classless addressing**
  - uses a variable number of bits for the network and host portions of the address (**variable-length blocks)**
  - treats the IP address as a 32 bit stream of ones and zeroes,
  - where the boundary between network and host portions can fall anywhere between bit 0 and bit 31.

# Classless Addressing

- **Classless addressing**
- How to find the prefix length if an address is given?
- As prefix length is not inherent in the address
  - Need to separately give the length of the prefix
- So, Prefix length is added to the address, separated by a slash

**Format of classless address**

The notation is informally referred to as slash notation and formally as ***classless inter-domain routing or CIDR***

**x.y.z.t/n**

# Table Prefix lengths

| /n | Mask | /n | Mask | /n | Mask | /n | Mask |
|---|---|---|---|---|---|---|---|
| /1 | 128.0.0.0 | /9 | 255.128.0.0 | /17 | 255.255.128.0 | /25 | 255.255.255.128 |
| /2 | 192.0.0.0 | /10 | 255.192.0.0 | /18 | 255.255.192.0 | /26 | 255.255.255.192 |
| /3 | 224.0.0.0 | /11 | 255.224.0.0 | /19 | 255.255.224.0 | /27 | 255.255.255.224 |
| /4 | 240.0.0.0 | /12 | 255.240.0.0 | /20 | 255.255.240.0 | /28 | 255.255.255.240 |
| /5 | 248.0.0.0 | /13 | 255.248.0.0 | /21 | 255.255.248.0 | /29 | 255.255.255.248 |
| /6 | 252.0.0.0 | /14 | 255.252.0.0 | /22 | 255.255.252.0 | /30 | 255.255.255.252 |
| /7 | 254.0.0.0 | /15 | 255.254.0.0 | /23 | 255.255.254.0 | /31 | 255.255.255.254 |
| /8 | 255.0.0.0 | /16 | 255.255.0.0 | /24 | 255.255.255.0 | /32 | 255.255.255.255 |

## Classful addressing is a special case of classless addressing

| Class | Binary | Dotted-Decimal | CIDR |
|---|---|---|---|
| A | 11111111 00000000 00000000 00000000 | 255.0.0.0 | /8 |
| B | 11111111 11111111 00000000 00000000 | 255.255.0.0 | /16 |
| C | 11111111 11111111 11111111 00000000 | 255.255.255.0 | /24 |

**Example 1:** What is the first address in the block if one of the addresses is ***167.199.170.82/27*****?**

***Solution*****:** The prefix length is 27, which means that we must keep the first 27 bits as is and change the remaining bits (5) to 0s. The following shows the process:

| | |
|---|---|
| Address in binary: | 10100111 11000111 10101010 01010010 |
| Keep the left 27 bits: | 10100111 11000111 10101010 01000000 |
| Result in CIDR notation: | 167.199.170.64/27 |

**Example 2:** What is the first address in the block if one of the addresses is 140.120.84.24/20? Number of addresses, first and last useable IPs in block? Broadcast address?

**Answer: The first address is 140.120.80.0/20**

| IP Address | | | |
|---|---|---|---|
| 140 | 120 | 84 | 24 |
| /n | | | |
| 8 | 8 | 4 | 0 |
| 140 | 120 | 80 | 0 |
| First Address | | | |

| | | | | | | | | |
|---|---|---|---|---|---|---|---|---|
| 84 | 0 | 1 | 0 | 1 | 0 | 1 | 0 | 0 |
| Keep left 4 bits | 0 | 1 | 0 | 1 | 0 | 0 | 0 | 0 |

Result in decimal: 80

| | 128 | 64 | 32 | 16 | 8 | 4 | 2 | 1 |
|---|---|---|---|---|---|---|---|---|
| Write 84 as sum of: | 0 | 64 | 0 | 16 | 0 | 4 | 0 | 0 |
| Select only leftmost 4: | 0 | 64 | 0 | 16 | | | | |
| Add to find the result: | 80 | | | | | | | |

**Example 4:** find the first and last address in the block if one of the addresses is 140.120.84.24/20.

**Answer:** The **first** address is **140.120.80.0/20** (set all bits of host part to 0)
The **last** address is **140.120.95.255/20** (set all bits of host part to 1)

**Another way to find the last address:**

Add the **mask complement** to the **beginning address** to find the **last address**.

```
140 . 120 . 80 .   0
  0 .   0 . 15 . 255
-----------------------------
140 . 120 . 95 . 255
```

**Example 5:** Find the block if one of the addresses is 190.87.140.202/29.

***Solution:*** To find the **first** address, we notice that the mask (/29) has five 1s in the last byte.

So write the last byte as powers of 2 and retain only the leftmost five:

**202** → **128 + 64 + 0 + 0 + 8 + 0 + 2 + 0**

**The leftmost 5 numbers are** → **128 + 64 + 0 + 0 + 8**

***The first address is 190.87.140.200/29***

**The number of addresses is $2^{32-29}$ or 8.**

To find the last address, use the complement of the mask. The mask has twenty-nine 1s; the complement has three 1s. The complement is 0.0.0.7. Add this to the first address to get 1**90.87.140.207/29**. So, the first address is 190.87.140.200/29, the last address is 190.87.140.207/29. There are only 8 addresses in this block.

# Previous Example: Network Configuration

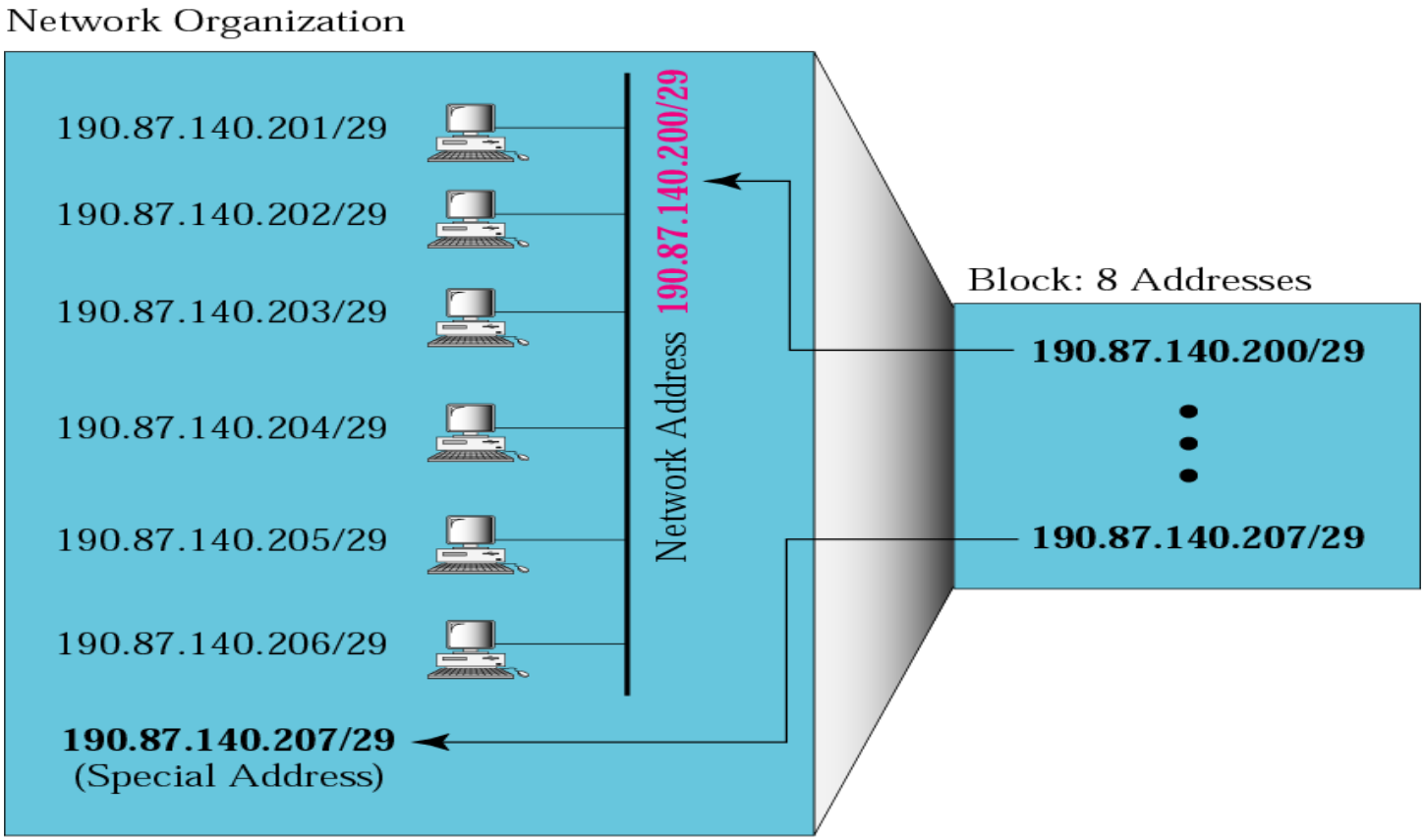


In classless addressing, the last address in the block does not necessarily end in 255.

- In classless addressing, an address can belong to many blocks (depending on value of prefix associated with that block).
- For example, consider the address **230.8.24.56**
  - It can belong to many blocks

| **Prefix length** | **Block** | |
|---|---|---|
| | From | To |
| 16 | 230.8.0.0 | 230.8.255.255 |
| 20 | 230.8.16.0 | 230.8.31.255 |
| 26 | 230.8.24.0 | 230.8.24.63 |
| 27 | 230.8.24.32 | 230.8.24.63 |
| 29 | 230.8.24.56 | 230.8.24.63 |
| 31 | 230.8.24.56 | 230.8.24.57 |

# Variable Length Subnet Mask (VLSM)

- VLSM is a way of further sub-netting  a subnet.
- we can allocate IPv4 addresses to the subnets by the exact need by using VLSM
- VLSM allows us to use more than one subnet mask within the same network address space.
- In classful addressing, we can divide a network only into subnets with equal number of IPv4 addresses.
- VLSM allows to create subnets from a single network with unequal number of IPV4 addresses

# Variable Length Subnet Mask (VLSM)

- Suppose we want to divide 192.168.10.0 (a Class C network) into four networks each with unequal number of address as per the following requirements:

  Subnet A : 126 IPv4 Addresses.
  Subnet B : 62 IPv4 Addresses.
  Subnet C : 30 IPv4 Addresses.
  Subnet D : 30 IPv4 Addresses.

- Such division is not possible in classful addressing, since it divides the network equally,
- **but it is possible with VLSM.**

# Two-level hierarchy in an IPv4 address

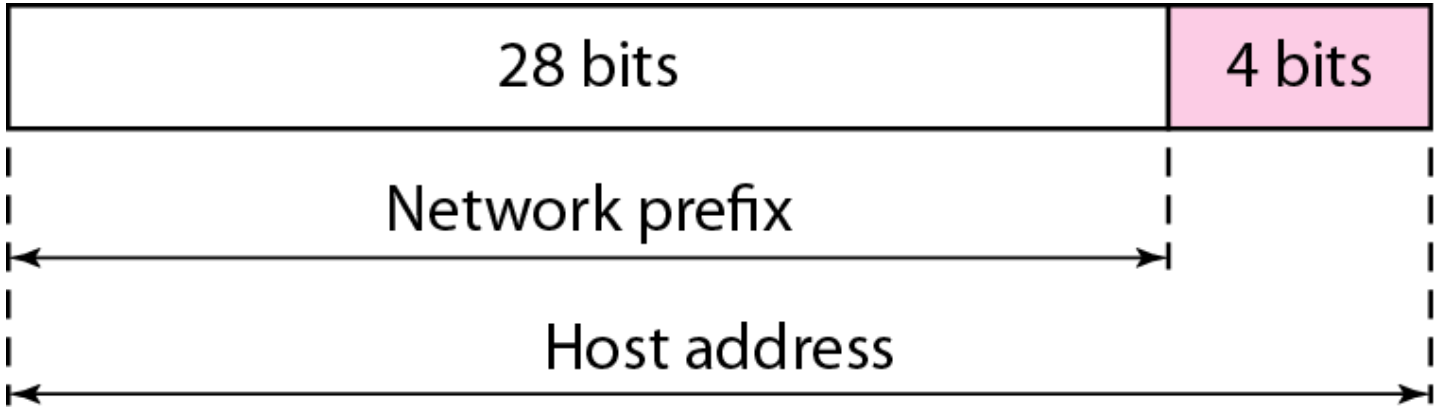


# Three-level hierarchy in an IPv4 address

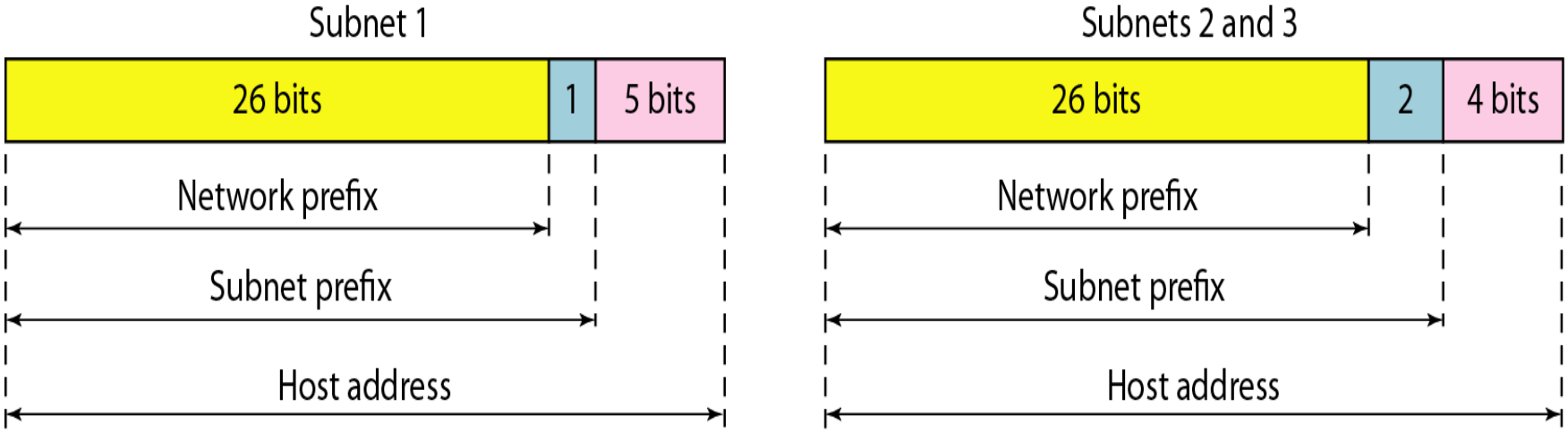

# Variable Length Subnet Mask (VLSM)

Division of **192.168.10.0/24 (original network)** into four networks **with VLSM.**

**FIRST DIVISION**

- Divide into two networks equally with 128 addresses (126 usable) using subnet mask 255.255.255.128

1. 192.168.10.0/25 [255.255.255.128]
   - 11000000.10101000.00001010.00000000 [in binary]
     11111111.11111111.11111111.10000000 [subnet mask]
2. 192.168.10.128/25 [255.255.255.128]
   - 11000000.10101000.00001010.10000000
     11111111.11111111.11111111.10000000 [subnet mask]

# Variable Length Subnet Mask (VLSM)

**SECOND DIVISION**

- Divide second subnet 192.168.10.128/25 (obtained from first division) again into two networks,
- Each with 64 addresses (62 usable) using subnet mask 255.255.255.192

1. 192.168.10.128/26 [255.255.255.192]
   - 11000000.10101000.00001010.10000000 [in binary]
     11111111.11111111.11111111.11000000 [subnet mask]
2. 192.168.10.192/26 [255.255.255.192]
   - 11000000.10101000.00001010.11000000
     11111111.11111111.11111111.11000000 [subnet mask]

# Variable Length Subnet Mask (VLSM)

**THIRD DIVISION**

- Divide second subnet 192.168.10.192/26 (obtained from second division) again into two networks,
- each with 32 addresses (30 usable) using subnet mask 255.255.255.224

1. 192.168.10.192/27 [255.255.255.224]
   - 11000000.10101000.00001010.11000000 [in binary]
     11111111.11111111.11111111.11100000 [subnet mask]
2. 192.168.10.224/27 [255.255.255.224]
   - 11000000.10101000.00001010.11100000
     11111111.11111111.11111111.11100000 [subnet mask]

- So, splitting of 192.168.10.0/24 into four subnets using VLSM with unequal number of addresses is done

**Example 2:**

An organization is granted a block of addresses starting with 17.12.14.0/26 (64 addresses).

The organization needs to have three sub-blocks of addresses to use in its three subnets:

- one sub-block of 32 addresses, and
- two sub-blocks of 16 addresses each.

Design the sub-blocks and find out how many addresses are still available after these allocations.

X.X.X.00xxxxxx

- X.X.X.000xxxxx
- X.X.X.001xxxxx
  - X.X.X.0010xxxx
  - X.X.X.0011xxxx

# Solution of Example 2:
# Configuration and addresses in a sub-netted network

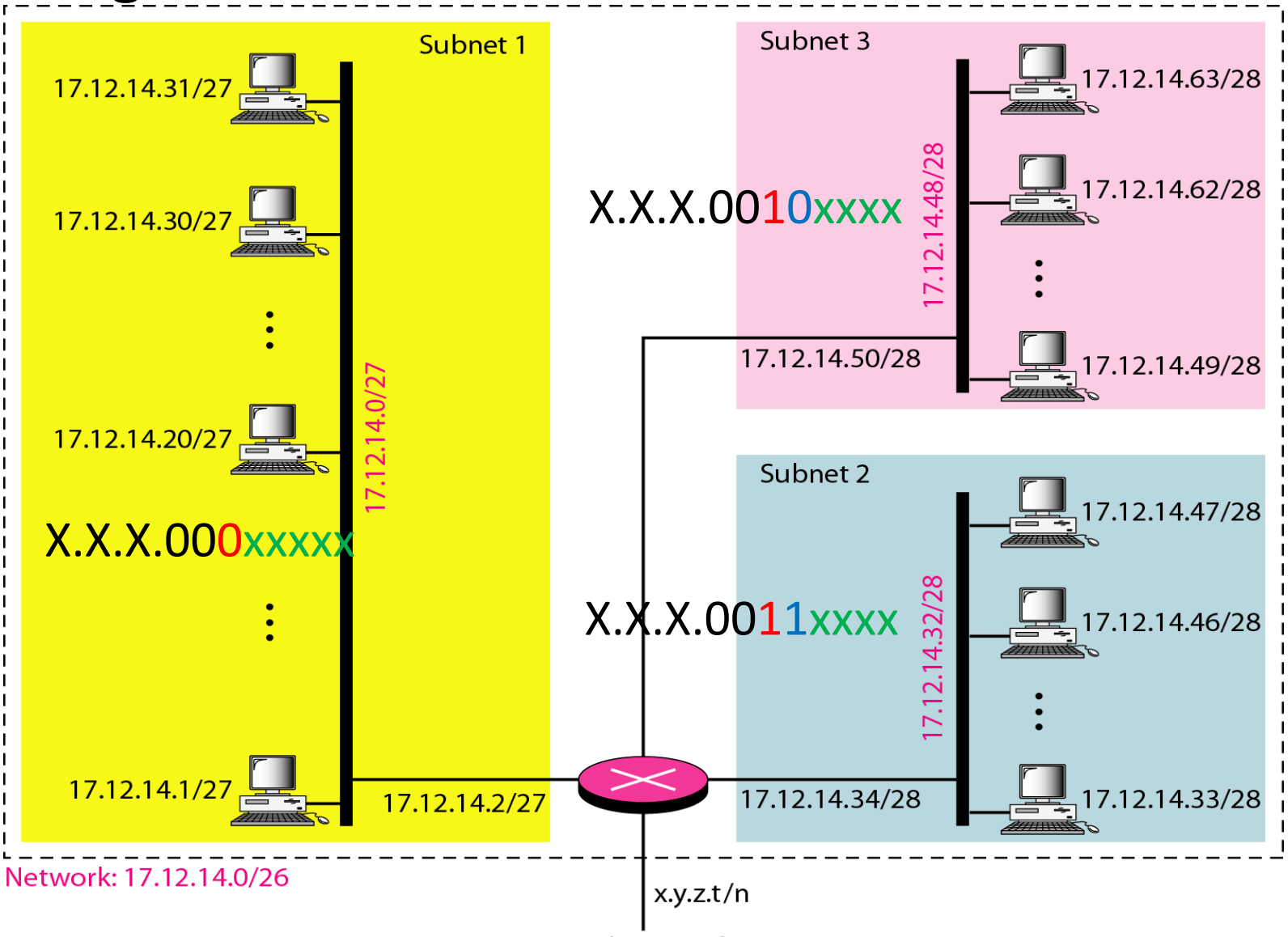

**Example 3:**

An organization is granted a block of addresses starting with 14.24.74.0/24.

The organization needs to have three sub-blocks of addresses to use in its three subnets:

- one sub-block of 10 addresses,
- one sub-block of 60 addresses, and
- one sub-block of 120 addresses.

Design the sub-blocks and find out how many addresses are still available after these allocations.

**Solution to Example 3:**

There are $2^{32-24} = 256$ addresses in this block. The first address is 14.24.74.0/24 and last address is 14.24.74.255/24 .

Assign addresses to sub-blocks starting with the largest and ending with the smallest one.

- Mask n1 for the **first** (largest) subnet $2^{32-n1}$ must be 128 (a number with power of 2 nearest to 120). **So n1 = 25.** We allocate 128 addresses instead of 120 to this subnet

  - The first address in this subnet is 14.24.74.0/25 and last address is 14.24.74.127/25

**Solution (previous example 3 continue)**

- Mask for the **second subnet** $2^{32-n2}$ must be 64 (a number with power of 2 nearest to 60). **So n2 = 26**
  - The first address in this subnet is 14.24.74.128/26 and last address is 14.24.74.191/26

- Mask for the **third subnet** $2^{32-n3}$ must be 16 (a number with power of 2 nearest to 10). So **n3 = 28**
  - The first address in this subnet is 14.24.74.192/28 and last address is 14.24.74.207/28

- So we have 128+64+16 = 208 addresses in all three sub-blocks.
  - Therefore, 48 address are still left in reserve.

# Example

An ISP is granted a block of addresses starting with 190.100.0.0/16 (65,536 addresses). The ISP needs to distribute these addresses to three groups of customers as follows:

a. The first group has 64 customers; each needs 256 addresses.
b. The second group has 128 customers; each needs 128 addresses.
c. The third group has 128 customers; each needs 64 addresses.

Design the sub-blocks and find out how many addresses are still available after these allocations.

# Example (continued)

*Solution*

*Group 1*

*For this group, each customer needs 256 addresses.*
*This means that 8 ($\log_2 256$) bits are needed to define each host.*
*The prefix length is then $32 - 8 = 24$.*

# Example (continued)

*X.X.00000000.x*
*X.X.00000001.x*
*…*
*X.X.00111111.x*
*…*

*Solution*

*Group 1: The addresses are*

| | | |
|---|---|---|
| 1st Customer: | 190.100.0.0/24 | 190.100.0.255/24 |
| 2nd Customer: | 190.100.1.0/24 | 190.100.1.255/24 |
| . . . | | |
| 64th Customer: | 190.100.63.0/24 | 190.100.63.255/24 |

Total = 64 × 256 = 16,384

# Example (continued)

*X.X.01000000.0-------*
*X.X.01000000.1-------*
*...*
*X.X.01111111. 0-------*
*X.X.01111111. 1-------*
*...*

*Group 2*

*For this group, each customer needs 128 addresses. This means that 7 ($\log_2 128$) bits are needed to define each host. The prefix length is then 32 − 7 = 25. The addresses are*

| | | |
|---|---|---|
| *1st Customer:* | *190.100.64.0/25* | *190.100.64.127/25* |
| *2nd Customer:* | *190.100.64.128/25* | *190.100.64.255/25* |
| . . . | | |
| *128th Customer:* | *190.100.127.128/25* | *190.100.127.255/25* |

*Total = 128 × 128 = 16,384*

# Example (continued)

*Group 3*

*For this group, each customer needs 64 addresses. This means that 6 ($\log_2 64$) bits are needed to each host. The prefix length is then $32 - 6 = 26$. The addresses are*

# Example (continued)

*X.X.10000000.00------*
*X.X.10000000.01------*
*X.X.10000000.10------*
*X.X.10000000.11------*
...
*X.X.10011111. 10-------*
*X.X. 10011111. 11-------*
...

| | | |
|---|---|---|
| *1st Customer:* | *190.100.128.0/26* | *190.100.128.63/26* |
| *2nd Customer:* | *190.100.128.64/26* | *190.100.128.127/26* |
| . . . | | |
| *128th Customer:* | *190.100.159.192/26* | *190.100.159.255/26* |

$Total = 128 \times 64 = 8192$

**Number of granted addresses to the ISP: 65,536**
**Number of allocated addresses by the ISP: 40,960**
**Number of available addresses: 24,576**

# Figure: An example of address allocation and distribution by an ISP

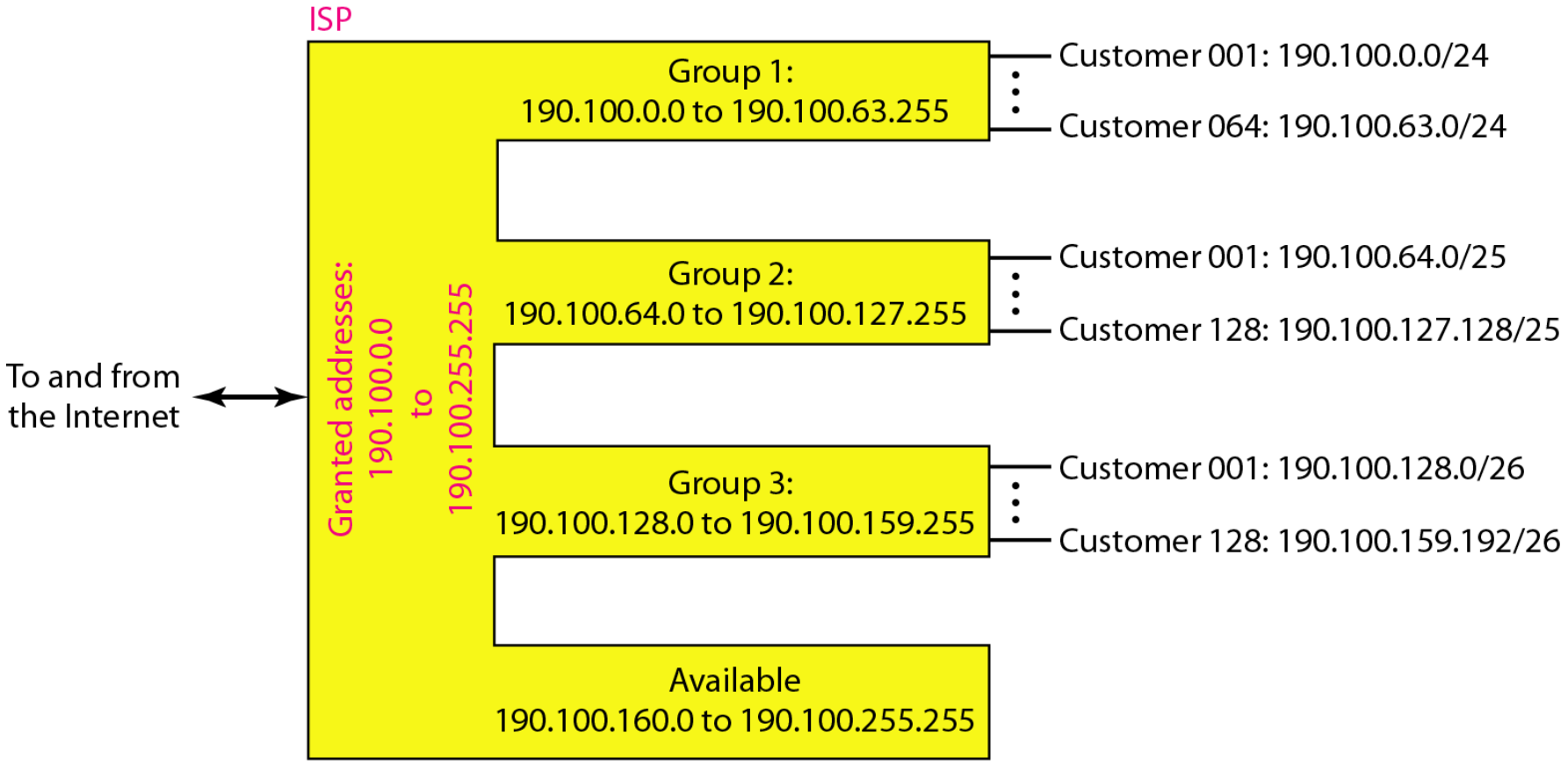

# Address depletion and IPv6

**Classless addressing** is a short term solution to solve the address depletion problem

- Uses the same address space but change the distribution of addresses to provide a fair share to each organization.

- Still uses the IPv4 addresses (class privilege was removed from the distribution)

# Address depletion and IPv6

- Despite all short-term solutions, address depletion is still a long-term problem for the Internet.

- This and other problems in the IP protocol itself have been the motivation for already devised **IPv6**.
  - **The long-range** solution
  - The larger address space is obtained by **increasing the length of IP addresses** (128 bits)

- It means that **format of IP** packets need to be changed

# IPv6 ADDRESSES

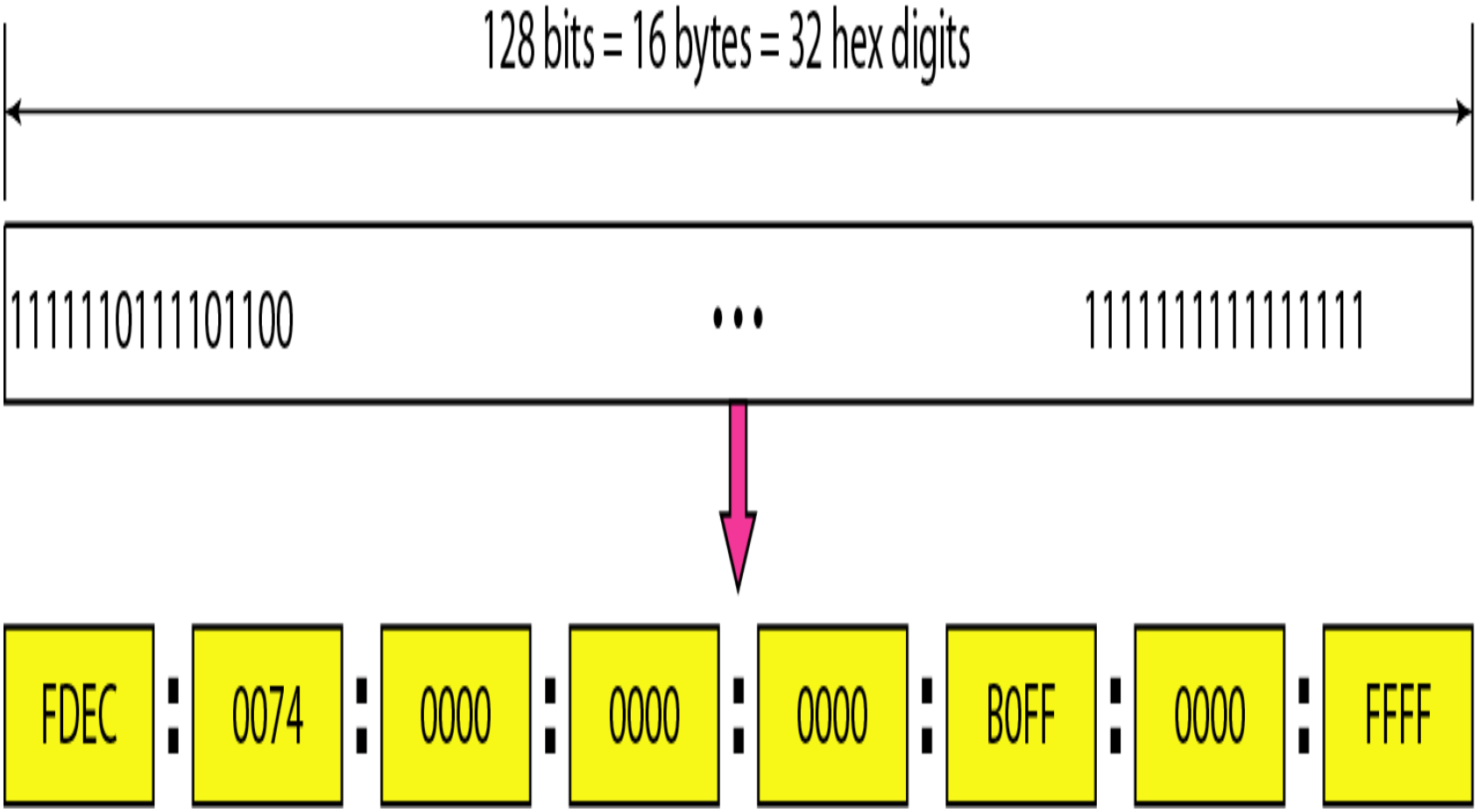

# Abbreviated IPv6 addresses

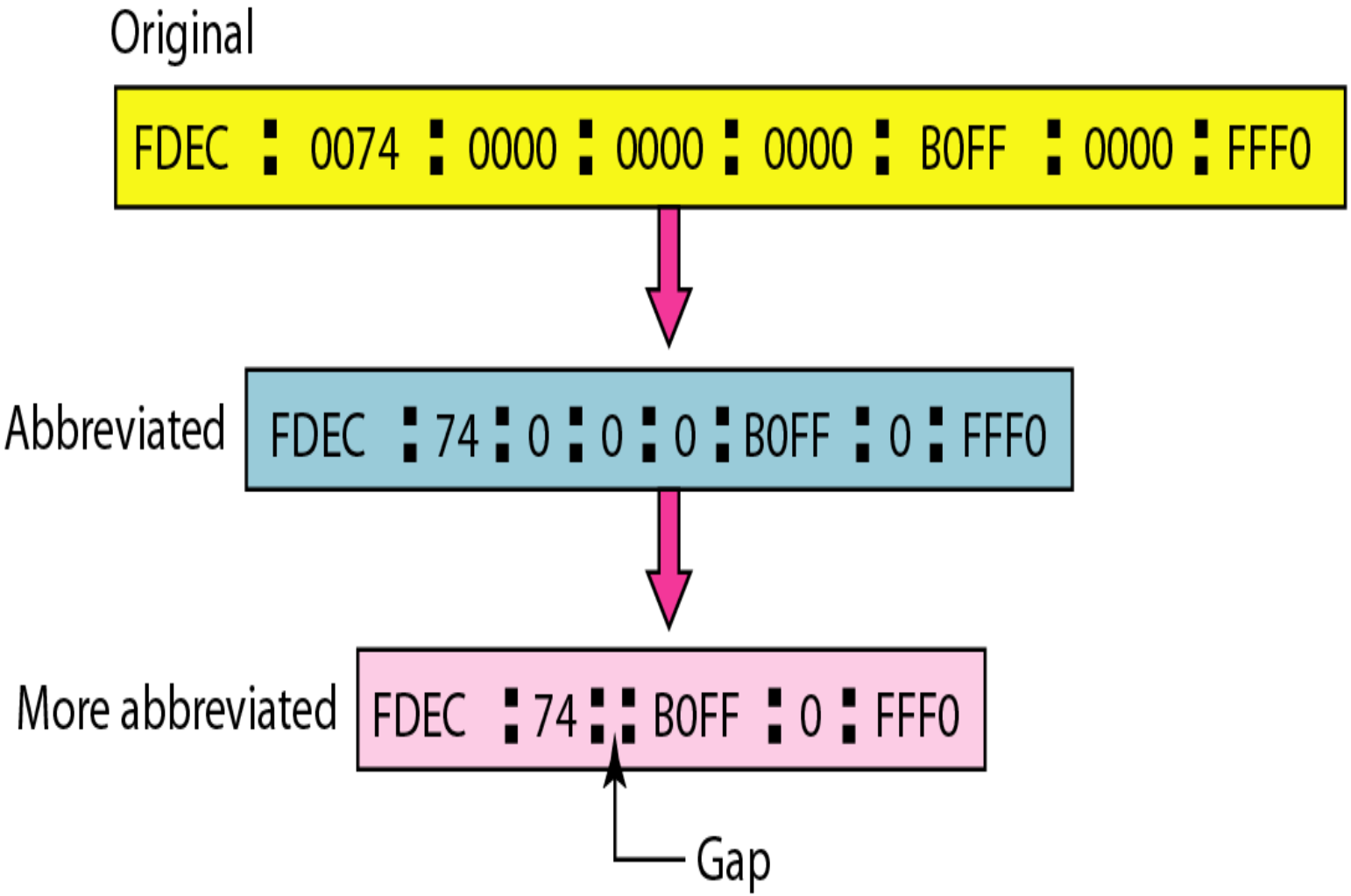

# EXAMPLE

Expand the address 0:15::1:12:1213 to its original.

Solution

We first need to align

- the left side of the double colon to the left of the original pattern and
- the right side of the double colon to the right of the original pattern

in order to find how many 0s we need to replace the double colon.

```
xxxx:xxxx:xxxx:xxxx:xxxx:xxxx:xxxx:xxxx
   0:   15:                  :    1:   12:1213
```

This means that the original address is.

```
0000:0015:0000:0000:0000:0001:0012:1213
```